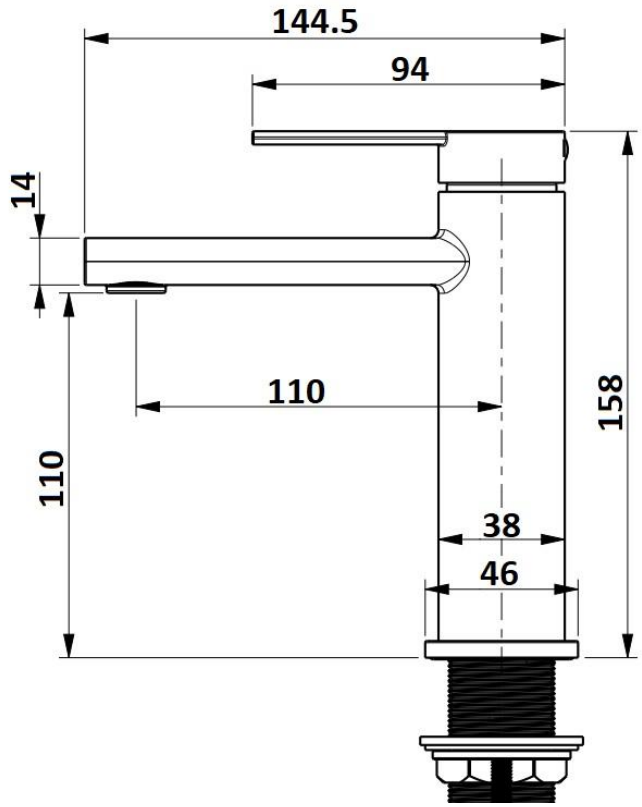

SPECIFICATIONS

SKU	1243802
CARTRIDGE	KEROX - European
AERATOR	Neoperl - Germany
HOSE	Neoperl - Germany
WATER PRESSURE	Minimum Pressure 150KPA Maximum Pressure 500KPA
WARRANTY	Cartridge: 25 Yrs Labour: 2 Yrs

Disclaimer: All products must be installed by Australia licensed plumber or registered trade person. The manufacture reserves the right to vary specifications or delete models without notification. Dimensions are nominal measurements only. There is no responsibility for printing errors taken by manufacturers.