BEAUMONT TILES
I chose Beaumonts!

APLIN

INSET BATH/SPA BATH WITH TILE BEAD - *Premium Sanitary Grade Acrylic, High Gloss White*

Made in Australia

The Aplin's timeless design features generous depth & additional features such as arm rests & ergonomic lumbar support that set the benchmark in corner bath design. *Centre waste position.*

☑ Molded arm rests ☑ Lumbar support ☑ Suitable for dual bathing ☒ Slip resistant pattern



APLIN BATH

SIZE (l) x (w) x (d) mm	CAPACITY*	NET WEIGHT	CODE
1295 x 1295 x 480	179L	20.3kg	**105500**
1465 x 1465 x 480	259L	24.5kg	**105505**

- **15 YR WARRANTY***
- AS/NZ Standard 2013/1995
- Steel rod reinforced rim
- Double reinforced bath base



APLIN SANTAI SPA BATH ◉ 6 or 12 JETS

SIZE (l) x (w) x (d) mm	CAPACITY*	NET WEIGHT	CODE
1295 x 1295 x 480	179L	25.3kg	**105501** 6 JETS **105504** 12 JETS
1465 x 1465 x 480	259L	45kg	**105506** 6 JETS **105509** 12 JETS

- **10 YR WARRANTY*** - SPA SHELL
- **5 YR WARRANTY*** - PUMP, JETS & FITTINGS
- AS/NZ Standard AS3861/1991
- Steel rod reinforced rim
- Double reinforced bath base
- 6 x low profile Mod centro jets
- 6 x low profile Mod mini jets (12-jet model)
- 1 x low profile Mod suction
- 1 x Mod power button (rim mounted)
- 2 x Mod air controls (rim mounted)
- 750 watt auto heat boost pump



APLIN CONTOUR SPA BATH ◉◉ 14 JETS

SIZE (l) x (w) x (d) mm	CAPACITY*	NET WEIGHT	CODE
1295 x 1295 x 480	179L	35.3kg	**105502**
1465 x 1465 x 480	259L	45kg	**105507**

- **10 YR WARRANTY*** - SPA SHELL
- **5 YR WARRANTY***- PUMP, JETS & FITTINGS
- AS/NZ Standard AS3861/1991
- Steel rod reinforced rim
- Double reinforced bath base
- 6 x flush C-Lenda™ centro jets
- 8 x flush C-Lenda™ mini jets
- 2 x flush C-Lenda™ air controls
- 1 x flush C-Lenda™ suction
- 1 x Sensa-Touch pad control (rim mounted)
- 750 watt 3-stage heat boost pump



APLIN DOLCE VITA ◉◉◉ 18 JETS

SIZE (l) x (w) x (d) mm	CAPACITY*	NET WEIGHT	CODE
1295 x 1295 x 480	179L	60.3kg	**105503**
1465 x 1465 x 480	259L	75kg	**105508**

- **10 YR WARRANTY*** - SPA SHELL
- **5 YR WARRANTY*** - PUMP, JETS & FITTINGS
- AS/NZ Standard AS3861/1991
- Steel rod reinforced rim
- Double reinforced bath base
- 6 x adjustable flush C-Lenda™ centro jets
- 12 x adjustable flush C-Lenda™ mini jets
- 2 x flush C-Lenda™ air controls
- 1 x flush C-Lenda™ suction
- Spa Key remote control
- 1100 watt spa key heat boost pump

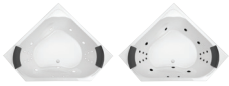

Available with Chrome, White or Black jets



*Capacity 200mm below the bath rim

APLIN ACCESSORIES	BATH	SANTAI SPA BATHS	CONTOUR SPA BATH	DOLCE VITA SPA BATH
Corner Base Support Frame	Optional	Optional	Optional	✓
SIA Headrests *(Black/White)*	Optional	Optional	✓ x 2	✓ x 2
Overflow	Optional	Optional	Optional	Optional
Plug & Waste	Optional	Optional	Optional	Optional

BEAUMONT TILES
I chose Beaumonts!

APLIN

INSET BATH/SPA BATH WITH TILE BEAD - *Premium Sanitary Grade Acrylic, High Gloss White*

Made in Australia

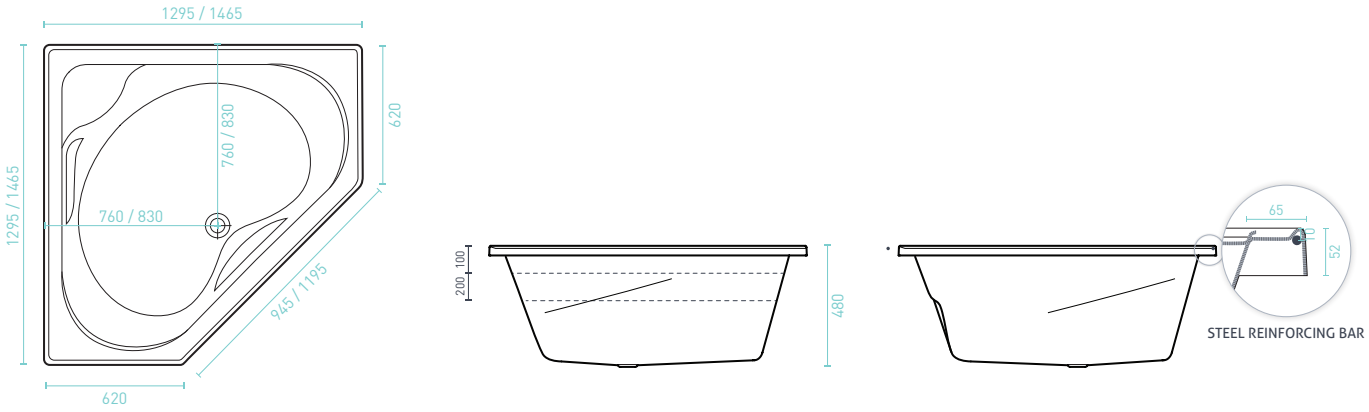

SPA BATH ORDER FORM

Spa baths are made to order on receipt of the order form & are non-refundable. Please allow 15 working days for completion & dispatch.
We recommend filling out your SPA BATH ORDER FORM with your qualified spa bath installer.

COMPANY & BRANCH: _____ **PHONE NO:** _____

CONTACT: _____ **ORDER NO:** _____ **DATE:** _____

MODEL: _____ **SIZE:** _____ **QTY:** _____ **RANGE** SANTAI ☐ CONTOUR ☐ DOLCE VITA ☐

SANTAI SPA BATH OPTIONS

PUMP UPGRADE Manual Xtra-Heat Boost Pump *(RRP $215)* ☐
EZI FRAME *(RRP from $115)* Supplied ☐ Factory Fitted *(Additional cost)* ☐
HEADRESTS *(RRP $99 each)* White QTY: _____ Black QTY: _____
PUMP UPGRADE Sensa-Touch Pad Control 3-Stage Heat *(RRP $425)* ☐
BASE SUPPORT FRAME Factory Fitted *(RRP $325)* ☐
OVERFLOW *(RRP from $120)* ☐

CONTOUR SPA BATH OPTIONS

EZI FRAME *(RRP from $115)* Supplied ☐ Factory Fitted ☐ *(Additional cost)*
HEADREST COLOUR *(NO additional cost)* White ☐ Black ☐
BASE SUPPORT FRAME Factory Fitted *(RRP $325)* ☐
OVERFLOW *(RRP from $120)* ☐

DOLCE VITA SPA BATH OPTIONS

HEADREST COLOUR *(NO extra cost)* White ☐ Black ☐
OVERFLOW *(RRP from $120)* ☐
JET COLOUR *(NO extra cost)* Chrome ☐ White ☐ Black ☐

SPA PUMP NOTES

- The spa pump does not fit directly in the baths perimeter *(allow 100mm)*
- Waste positions can not be changed
- The spa pump must be easily accessible for maintenance
- The spa pump controls will always be at the front, unless indicated below
- We recommend spa pumps installed outside are fitted with a Spa Pump Cover *(RRP $199)*

----- Please refer to the technical drawings before choosing your spa pump position, as spa bath waste & pump positions CAN NOT be customised -----

1. CIRCLE YOUR PUMP POSITION **A / B / C** ON THE DIAGRAM
300mm of pipework & 2 elbows are supplied to install the pump in the correct orientation.
If extra pipework is required, how much? _____mm *(max. recommended distance between the spa bath & pump is 1.2m)*

2. CROSS (X) YOUR SHOWER HEAD POSITION ON THE DIAGRAM *(if applicable)*
Spa pump controls can not be on the same end as the shower.

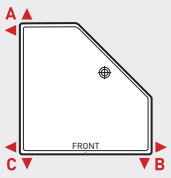

CUSTOMER NAME: _____ **CUSTOMER SIGNATURE:** _____

CUSTOMER EMAIL: _____ **CUSTOMER PHONE NO:** _____

*Whilst every effort is made to adhere to published jet & fittings positions, variation to specifications may occur without notice.

DECINA
DISCOVER INDULGENCE

DECINA.COM.AU 1300 DECINA

*Warranty T&Cs apply, visit decina.com.au Decina reserves the right to change specifications without notice. Due to manufacturing tolerances dimensions may vary +/- 5mm.
We recommend installation does not start until after delivery. Please confirm all particulars prior to purchase, call 1300 DECINA or visit decina.com.au