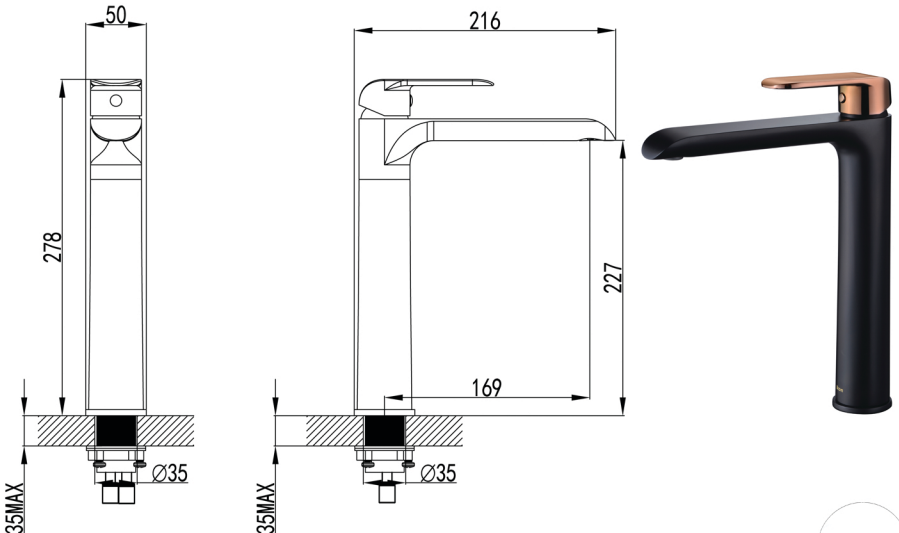

JAYA HIGH RISE BASIN MIXER 1010806

FINISH: Matt Black with Rose Gold Handle
WORKING PRESSURES: 150-500kpa
OPERATING TEMPERATURE: 1°C to 70°C
WELS: 5 STAR 5L PER MIN
CARTRIDGE TYPE: Kerox 35mm Cartridge
AERATOR: Neoperl

WARRANTY:
15 year Ceramic disk cartridges-parts only
Note: Excludes damage to ceramic disk cartridges from pieces of copper tube, plastic tube, sand, dirt or thread tape etc.
7 year replacement products or parts
5 year replacement products or parts and labor

FOR MORE INFORMATION VISIT
www.aclco.com.au

EMAIL: sales@aclcompany.com.au www.aclco.com.au **Tel:** 02 9647 1383